en.tongwei.cn

TW SOLAR

TNC 2.0

N-type Half-cell Monofacial Dual Glass Full-black Module (48)

TWMNH-48HE

- Higher power output, higher conversion efficiency
- Passed hail resistance test for higher reliability
- Compact size and lightweight, making installation easier
- Aesthetic glass with a deep and versatile design, perfectly blending with rooftops

450-470W

Residential Rooftop

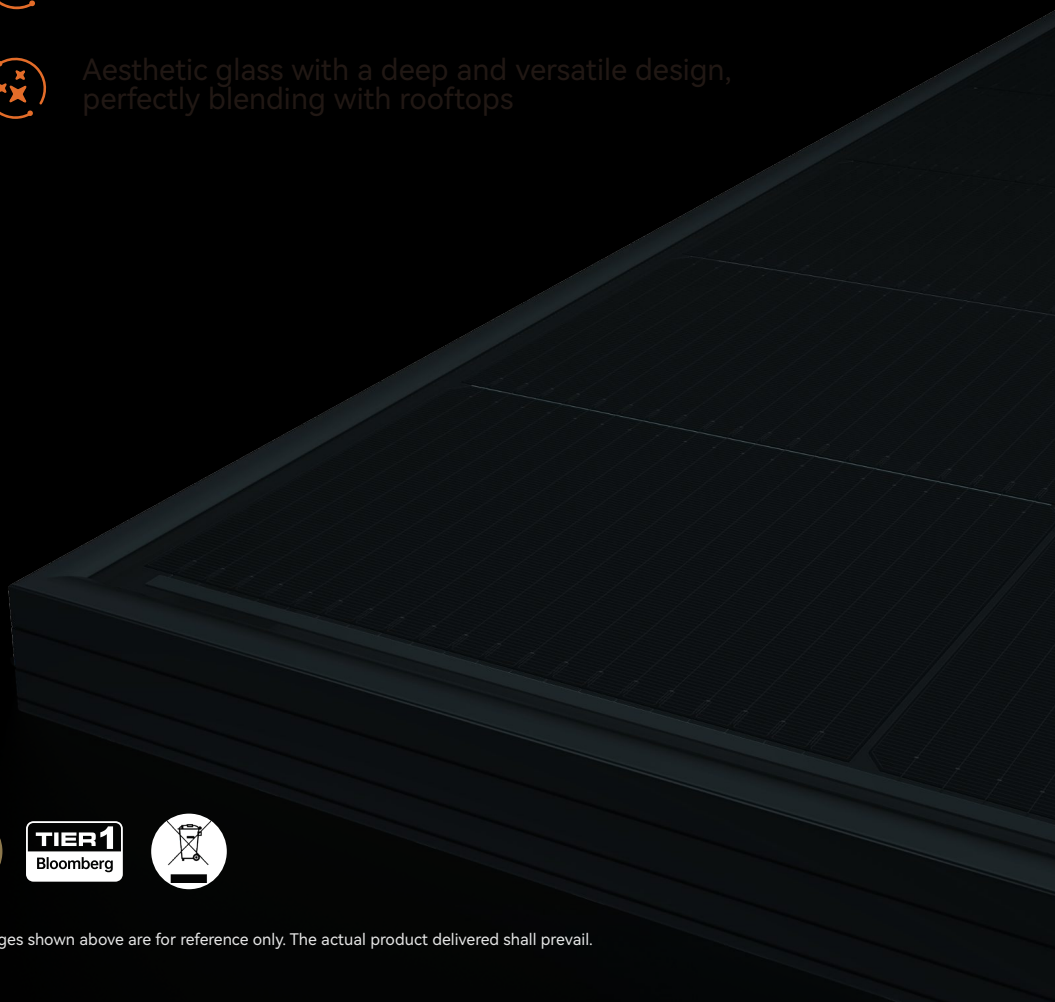

TÜV NORD Type Tested · Certisolis · CE · ecovadis · TIER 1 Bloomberg

* The images shown above are for reference only. The actual product delivered shall prevail.

TWMNH N-type Half-cell Monofacial Dual Glass Full-black Module (48)

Drawing (Unit: mm)

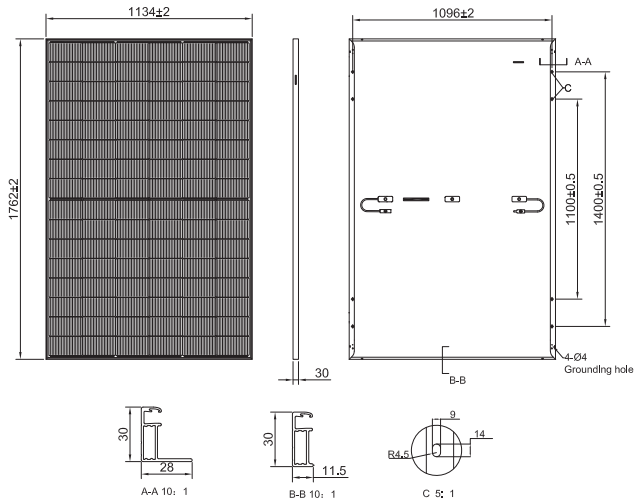

Mechanical Parameters

Cell Type	TNC
Cell Orientation	96[6×16]
Dimension	1762±2×1134±2×30mm
Weight	23.7 kg
Front Glass	2.0 mm AR coating semi tempered glass
Rear Glass	2.0 mm semi tempered glass
Frame	Anodized aluminum alloy black frame
Junction Box	IP68, 3 diodes
Cable	4.0 mm²
Cable Length	+1200mm,-1200mm,length can be customized
Maximum Static Test Load	6,000 Pa (front) / 4,000 Pa (rear)
Packaging (Per pallet)	36 pcs
Packaging	936 pcs per 40'HC

Electrical Characteristics (STC)

Module type: TWMNH-48HEXXX

Maximum Power: Pmax [W]	450	455	460	465	470
Open Circuit Voltage: Voc [V]	35.95	36.10	36.25	36.40	36.55
Short Circuit Current: Isc [A]	15.81	15.85	15.89	15.92	15.95
Voltage at Maximum Power: Vmp [V]	29.81	30.06	30.31	30.56	30.80
Current at Maximum Power: Imp [A]	15.10	15.14	15.18	15.22	15.26
Module Efficiency: η [%]	22.5	22.8	23.0	23.3	23.5

* STC: Irradiance 1000W/m², Cell Temperature 25℃, AM=1.5,Power measurement tolerance:±3%

Warranty

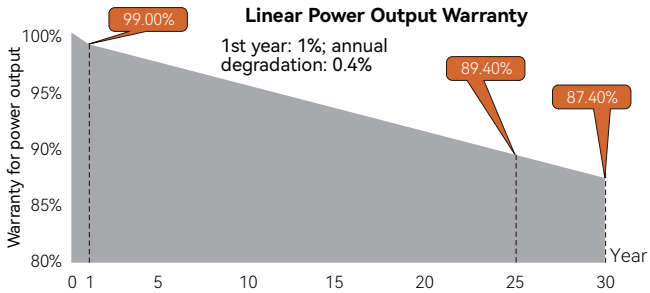

15 15-year Material and Workmanship Warranty

30 30-year Linear Power Output Warranty

Temperature Rating

Temperature Coefficient of Pmax	-0.28%/℃
Temperature Coefficient of Voc	-0.24%/℃
Temperature Coefficient of Isc	+0.046%/℃

Curve

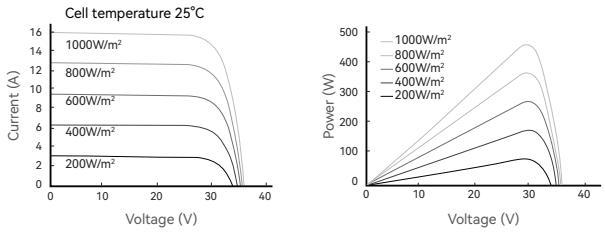

Operating Parameters

Operating Temperature	-40℃~+85℃
Maximum System Voltage	1500V DC
Maximum Series Fuse Rating	30A
Power Output Tolerance	0~+3%

Certifications

Quality Management System and Product Certification

ISO9001:2015/Quality Management System
ISO14001:2015/Environmental Management System
ISO45001:2018/Occupational Health and Safety Management System
ISO50001:2018 / Energy Management System
EC62941:2019 / Quality System for PV Module Manufacturing
IEC 61215 / IEC 61730 , IEC TS 62804,
IEC 61701, IEC 62716, IEC 60068-2-68

Scan the code for more information

Email: sales@tongwei.com **Website:** https://en.tongwei.cn/ **Add:** No.588, Middle Section Tianfu Avenue, High-Tech Zone, Chengdu, China (Sichuan) Pilot Free Trade Zone **Tel:** +86-028-60707985

Statement: With technological process and product update, there maybe deviation between the technical parameters of Tongwei's module products and the technical parameters contained in the specification, and Tongwei Solar has the right to adjust the technical parameters at any time without notifying the customer, the final interpretation of the technical specification is vested in Tongwei Solar. (Ver.20250801)